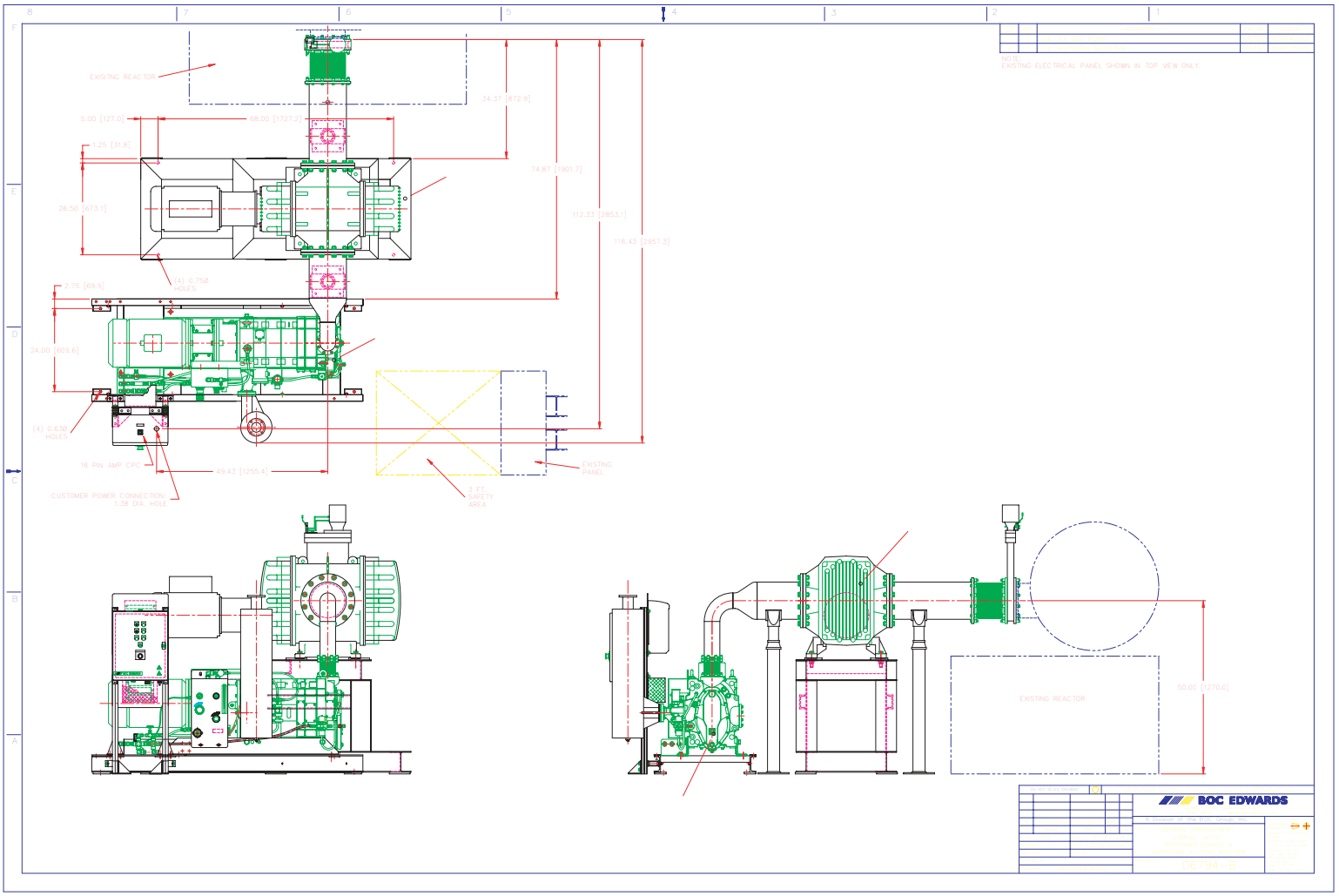
EXISTING REACTOR
34.37 [872.9]
5.00 [127.0]
68.00 [1727.2]
1.25 [31.8]
74.87 [1901.7]
26.50 [673.1]
112.33 [2853.1]
116.43 [2957.3]
(4) 0.750 HOLES
2.75 [69.9]
24.00 [609.6]
(4) 0.630 HOLES
16 PIN AMP CPC
49.43 [1255.4]
CUSTOMER POWER CONNECTION: 1.38 DIA. HOLE
EXISTING PANEL
3 FT. SAFETY AREA
EXISTING REACTOR
50.00 [1270.0]
NOTE:
EXISTING ELECTRICAL PANEL SHOWN IN TOP VIEW ONLY.
BOC EDWARDS